FEATURES

- ***48 FPS*** for full frame (4k x 4k), up to 380 FPS for subarea
- ***Single Electron Sensitivity***, ~380 cnt/e^-
- Ultra high dynamic range
- Industry leading ***DQE*** (67%$^{Nyq/2}$ @ 80kV)

BEST FIT FOR ...

... the most demanding applications like ***In-Situ*** (with look-back), ***Spectroscopy*** (EFTEM, EELS), ***Precession Diffraction Mapping Tomography***, ***Low-Dose*** and even ***Electron Counting***.

TVIPS develops and manufactures cutting edge digital TEM cameras and accessories since over 30 years and is proud to take your science one step ahead. Visit ***www.tvips.com*** for more information!

Integrates In-Situ holders from

DENS solutions

Powers Energy Filters from

CEOS
Corrected Electron Optical Systems GmbH

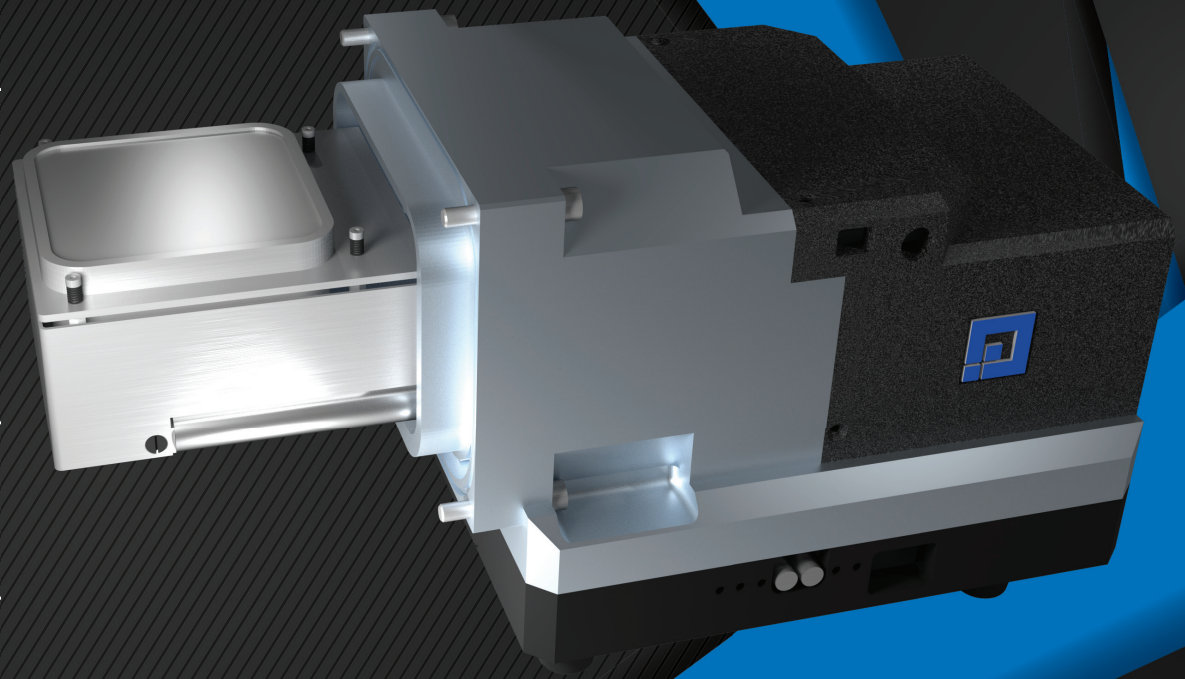

XTemCam F416-ES

One step ahead...

TVIPS
TIETZ VIDEO AND IMAGE PROCESSING SYSTEMS

DATASHEET

	TemCam F416	TemCam F416-ES
Frame Rate @ full (reduced) resolution	24 fps (190 fps @ 512 x 4k)	48 fps (380 fps @ 512 x 4k)
Pixel size (µm²)	15.5 x 15.5	
Field of view (mm²)	63.5 x 63.5	
Digitalization	16bit	
Sensor size in pixel	4096 x 4096	
Dynamic Range (max/noise)	20000:1	
Signal/noise ratio of a single 200kV electron	29:1	
Resolution @ 200kV (NTF @ Nyquist)	≈20%	
Mounting position	On-axis or retractable	
MTF @ Nyquist/2	27% @ 200kV	
DQE @ Nyquist/2	28% @ 200kV	

FEATURED APPLICATIONS

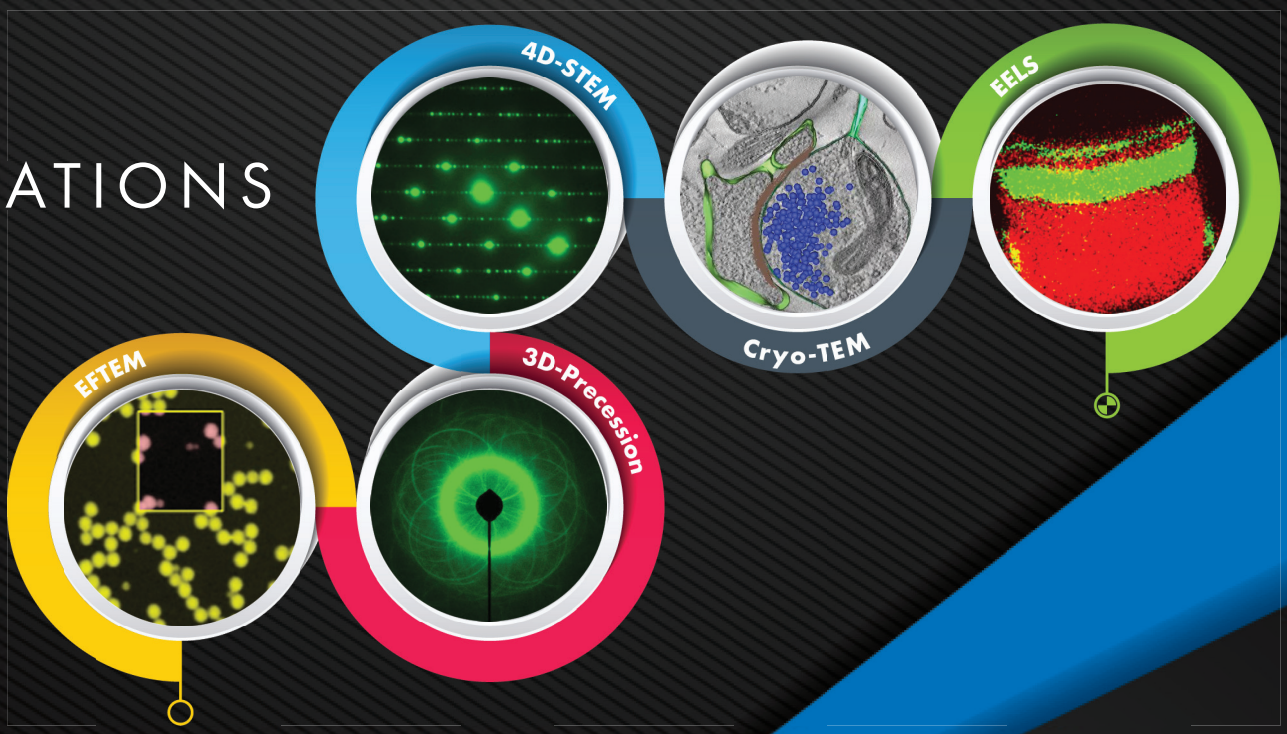

TVIPS
TIETZ VIDEO AND IMAGE PROCESSING SYSTEMS
Eremitenweg 1
D - 82131 Gauting
+49 (89) 850 6567
info@tvips.com
http://www.tvips.com